User manual
Tumble dryer

TD6–45, TD6–45SLD, TD6–60, TD6–60SLD

Type N4...

Original instructions

438917993/GB, IE
2026.09.29

Contents

1 Safety Precautions 5
1.1 Additional safety precautions for gas heated tumble dryer 6
1.2 General safety information 6
1.3 Commercial use only 7
1.4 Copyright 7
1.5 Ergonomics certification 7
1.6 Symbols 8
2 Warranty terms and exclusions 9
3 Operating panel 10
3.1 Options 11
4 Program description 12
4.1 General 12
4.2 Program description 12
5 Handling 15
5.1 Load 15
5.2 How to start the machine 16
5.3 Additional functions 17
5.4 When program has ended 17
5.4.1 Tilting operation for easy unloading 18
5.4.2 Rotating the drum when unloading 18
5.4.3 Clean the filter compartment 19
6 Error codes 20
7 Maintenance 21
7.1 General 21
7.2 Time for maintenance 21
7.3 Every day 21
7.4 Machines with Moisture Balance (MB) 23
7.5 Maintenance to be carried out by qualified service personnel 23
8 Disposal information 25
8.1 Appliance recyclability and disposal 25
8.1.1 Recyclability 25
8.1.2 Procedure regarding appliance disposal and component / material recovery 25
8.2 Disposal of packing 25

The manufacturer reserves the right to make changes to design and component specifications.

1 Safety Precautions

- Servicing shall be carried out only by authorized personnel.
- Only authorized spare parts, accessories and consumables shall be used.
- The machine is not to be used if industrial chemicals have been used for cleaning.
- Do not dry unwashed items in the machine.
- WARNING: Items that have been soiled with substances such as hair care products, cooking oil, acetone, alcohol, petrol, kerosene, spot removers, turpentine, waxes and wax removers shall be cleaned sufficiently to remove the contaminant before being tumble dried. When washing such soiled items ensure the use of detergent as specified by the detergent manufacturer and select the highest suitable temperature. If in doubt, wash the items several times.
- Items such as foam rubber (latex foam), shower caps, waterproof textiles, rubber backed articles and clothes or pillows fitted with foam rubber pads should not be dried in the machine.
- Fabric softeners or similar products should be used as specified by the fabric softener instructions.
- The final part of a drying cycle occurs without heat (cool down cycle) to ensure that the items are left at a temperature that ensures that the items will not be damaged.
- Remove all objects from pockets such as lighters and matches.
- WARNING. Never stop the machine before the end of the drying cycle unless all items are quickly removed and spread out so that the heat is dissipated.
- Adequate ventilation has to be provided to avoid the back flow of gases into the room for appliances burning other fuels, including open fires.
- Exhaust air must not be discharged into a flue which is used for exhausting fumes from appliances burning gas or other fuels.
- The machine must not be installed behind a lockable door, a sliding door or a door with a hinge on the opposite side to that of the machine in such a way that a full opening of the machine is restricted.
- If the machine has a lint trap this has to be cleaned frequently.
- The lint must not be accumulated around the machine.
- DO NOT MODIFY THIS APPLIANCE.
- When performing service or replacing parts, the power must be disconnected.
- When the power is disconnected, the operator must see that the machine is disconnected (that the plug is removed and remains removed) from any point to which he has access. If this is not possible, due to the construction or installation of the machine, a disconnection with a locking system in the isolated position shall be provided.
- In accordance with the wiring rules: mount a multi-pole switch prior to the machine to facilitate installation and service operations.
- WARNING: The appliance must not be supplied through an external switching device, such as a timer, or connected to a circuit that is regularly switched on and off by a utility.
- If different rated voltages or different rated frequencies (separated by a /) are stated at the machine data plate, instructions for adjusting the appliance for operation at the required rated voltage or rated frequency are stated in the installation manual.
- Stationary appliances not fitted with means for disconnection from the supply mains having a contact separation in all poles that provide full disconnection under

overvoltage category III, means for disconnection must be incorporated in the fixed wiring in accordance with the wiring rules.

- The openings in the base, shall not be obstructed by a carpet.
- Oil-affected items can ignite spontaneously, especially when exposed to heat sources such as in a tumble dryer. The items become warm, causing an oxidation reaction in the oil. Oxidation creates heat. If the heat cannot escape, the items can become hot enough to catch fire. Piling, stacking or storing oil-affected items can prevent heat from escaping and so create a fire hazard.
- Maximum mass of dry cloth: TD6–45: 50 kg, TD6–60: 67 kg.
- A-weighted emission sound pressure level at working stations: < 70 dB(A).
- Additional requirements for the following countries; AT, BE, BG, HR, CY, CZ, DK, EE, FI, FR, DE, GR, HU, IS, IE, IT, LV, LT, LU, MT, NL, NO, PL, PT, RO, SK, SI, ES, SE, CH, TR, UK:
  - CAUTION: This appliance shall not be installed where the public has access.
- Additional requirements for other countries:
  - This appliance is not intended for use by persons (including children) with reduced physical, sensory or mental capabilities, or lack of experience and knowledge, unless they have been given supervision or instruction concerning use of the appliance by a person responsible for their safety. Children should be supervised to ensure that they do not play with the appliance.

1.1 Additional safety precautions for gas heated tumble dryer

- Before installation, check that the local distribution conditions, nature of gas and pressure and the adjustment of the appliance are compatible.
- The machine is not to be installed in rooms containing cleaning machines with perchloroethylene, TRICHLOROETHYLENE or CHLOROFLUOROCONTAINING HYDROCARBONS as cleaning agents.
- NOTE: it is pointed out that the connection and commissioning of appliances complying with this standard are subject to observance of the installation regulations in force in the countries where these appliances are marketed.
- Connection to the appliance shall be made with a flexible hose suitable for the appliance category in accordance with national installation regulations of the country of destination and that in case of doubt the installer shall contact the supplier.
- The appliance should be installed on non-flammable materials for the floor, worktop and/or wall close to the appliance if required.
- If you can smell gas:
  - Do not switch on any equipment
  - Do not use electrical switches
  - Do not use telephones in the building
  - Evacuate the room, building or area
  - Contact the person responsible for the machine

1.2 General safety information

In order to prevent damage to the electronics (and other parts) that may occur as the result of condensation, the machine should be placed in room temperature for 24 hours before being used for the first time.

1.3 Commercial use only

The machine/machines covered by this manual is/are made for commercial and industrial use only.

1.4 Copyright

This manual is intended solely for consultation by the operator and can only be given to third parties with the permission of Electrolux Professional AB company.

1.5 Ergonomics certification

The human body is designed for movement and activity but physical stress injuries as a result of static and repetitive movements or unfavorable working postures may occur.

The ergonomic features of your product, the ones which may influence your physical and cognitive interaction with it, have been assessed and certified.

A product which exhibits ergonomic features, in fact, shall fulfil specific ergonomic requirements, belonging to three different areas: Polytechnic, Biomedical and Psychosocial (usability and satisfaction).

For each of these areas, specific tests with real users have been performed. The product was therefore compliant with the ergonomic acceptability criteria requested by the standards.

In case several machines are managed by the same operator the repetitive movements will increase and as a consequence of this the related biomechanical risk will increase exponentially.

Follow the below recommendations to avoid, as much as possible, operators acquiring bodily injury.

- Make sure there are suitable trolleys or baskets for loading, unloading and transportation.
- Organize job rotation in the working place in the case several machines are managed by the same operator.
- When using the operating panel: Increase the distance from the machine by taking steps back before looking up at the display.
- To avoid injuries to the back when opening/closing the filter door, the operators should, as far as possible, bend their knees instead of their backs.
- While the operators lift the filter door, they should reduce the distance between the feet and the handles as much as possible and flex their legs instead of their backs.
- When loading and unloading:

  Reduce as much as possible the picking distance. If a trolley is used; avoid the trolley being positioned between the operator and the machine.

  If the operator needs to raise the arm above shoulder height, he/she should reduce the number of objects handled during each picking operation.

1.6 Symbols

	Caution
	Caution, hot surface
	Caution, high voltage
	Warning, risk of fire / flammable material
	Danger, crush hazard
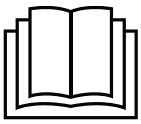	Read the instructions before using the machine

2 Warranty terms and exclusions

If the purchase of this product includes warranty coverage, warranty is provided in line with local regulations and subject to the product being installed and used for the purposes as designed, and as described within the appropriate equipment documentation.

Warranty will be applicable where the customer has used only genuine spare parts and has performed maintenance in accordance with Electrolux Professional AB user and maintenance documentation made available in paper or electronic format.

Electrolux Professional AB strongly recommends using Electrolux Professional AB approved cleaning, rinse and descaling agents to obtain optimal results and maintain product efficiency over time.

The Electrolux Professional AB warranty does not cover:

- service trips cost to deliver and pick up the product;
- installation;
- training on how to use/operate;
- replacement (and/or supply) of wear and tear parts unless resulting from defects in materials or workmanship reported within one (1) week from the failure;
- correction of external wiring;
- correction of unauthorized repairs as well as any damages, failures and inefficiencies caused by and/or resulting from;
  - insufficient and/or abnormal capacity of the electrical systems (current/voltage/frequency, including spikes and/or outages);
  - inadequate or interrupted water supply, steam, air, gas (including impurities and/or other that does not comply with the technical requirements for each appliance);
  - plumbing parts, components or consumable cleaning products that are not approved by the manufacturer;
  - customer’s negligence, misuse, abuse and/or non-compliance with the use and care instructions detailed within the appropriate equipment documentation;
  - improper or poor: installation, repair, maintenance (including tampering, modifications and repairs carried out by third parties not authorized third parties) and modification of safety systems;
  - Use of non-original components (e.g.: consumables, wear and tear, or spare parts);
  - environment conditions provoking thermal (e.g. overheating/freezing) or chemical (e.g. corrosion/oxidation) stress;
  - foreign objects placed in- or connected to- the product;
  - accidents or force majeure;
  - transportation and handling, including scratches, dents, chips, and/or other damage to the finish of the product, unless such damage results from defects in materials or workmanship and is reported within one (1) week of delivery unless otherwise agreed;
- product with original serial numbers that have been removed, altered or cannot be readily determined;
- replacement of light bulbs, filters or any consumable parts;
- any accessories and software not approved or specified by Electrolux Professional AB.

Warranty does not include scheduled maintenance activities (including the parts required for it) or the supply of cleaning agents unless specifically covered within any local agreement, subject to local terms and conditions.

Check on Electrolux Professional AB website the list of authorized customer care.

3 Operating panel

Standard models	Sliding door models
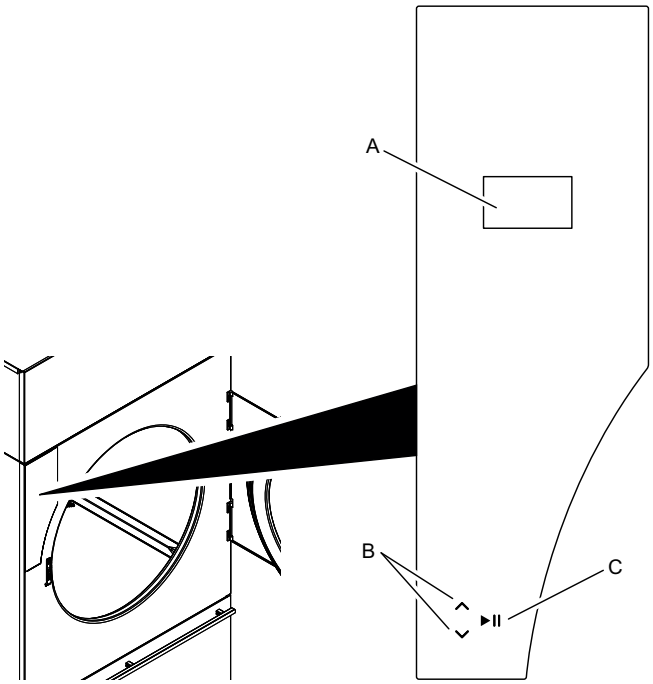	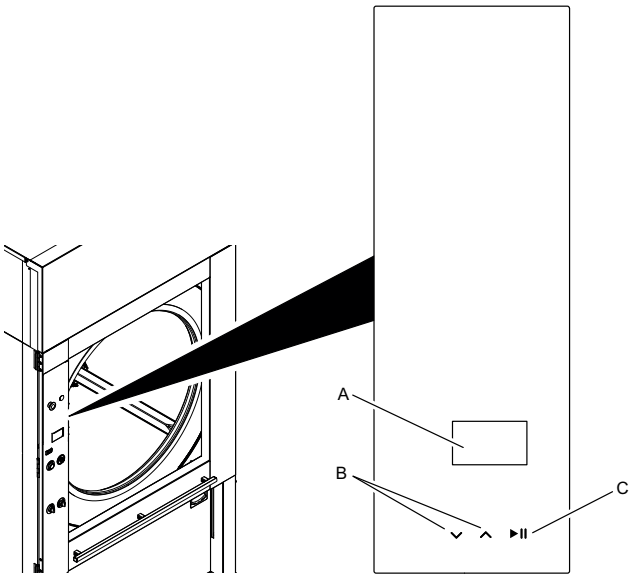

A	Display
B	Up- and down arrows that are used to scroll up and down through the menus on the display.
C	Start- and pause button

3.1 Options

The machine can be equipped with several combinations of options. The following tables explains the function of each knob/button.

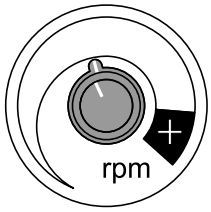	Drum rotation speed knob Use the knob to adjust the rotation speed of the drum.

Use the following table as a guide to set the optimum drum speed.

Optimum drum speed	Too fast drum speed	Too slow drum speed
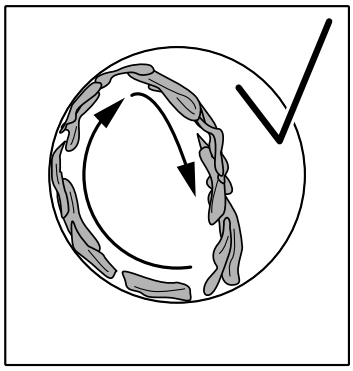	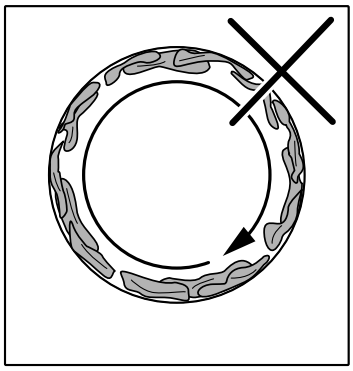	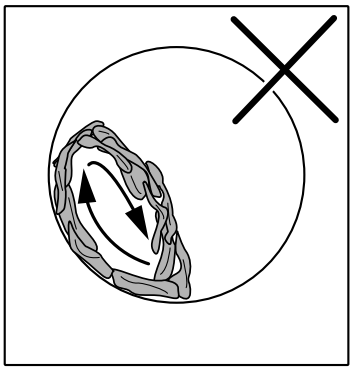

The table of optimum drum speed is a general recommendation. Optimal drum speed and how the load should be distributed in the drum can vary depending on type of load and drying process, the table should thus be seen as general load distribution recommendation.

The following options are only for machines with sliding door:

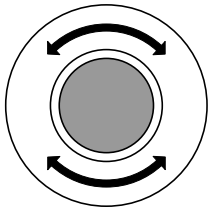	Drum rotation button Press the button at the same time as using the Drum rotation knob.	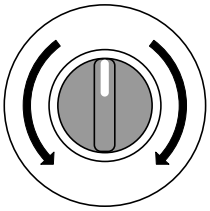	Drum rotation knob Turn the knob to the left or right to rotate the drum while emptying the machine. For safety reason the Drum rotation button must be pressed at the same time.
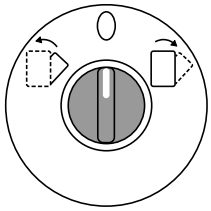	Tilt knob Use the knob to tilt the machine while loading or unloading the machine. Turn the knob to the right for tilting the machine forward and turn the knob to the left to move it back to upright position. The switch must be set in left position to be able to start a drying program. The tilting can be stopped by putting the knob in the middle position.		

4 Program description

4.1 General

The machine is equipped with a number of programs adapted to the range of use to which the machine is intended — different markets use different programs. The following program description is a short description of some examples of programs that can be used.

For best possible drying result it is advisable to dry garments of the same quality for each drying cycle.

4.2 Program description

There are two types of programs, automatic programs and time programs.

- Automatic programs has moisture detection and will stop when selected dryness is achieved.
- Time programs has no moisture detection and will stop when the preset or selected time has ended.

During a drying cycle, when the square in the lower right corner is fully ticked, it indicates that the heating unit is active / ON. The heating unit can be gas, electric or steam.

If the square box is not ticked, it doesn't mean the heating unit is abnormal. This box is just monitoring the status of the heating unit and shows if it is Active / ON or Inactive / OFF.

- A = Active / ON
- B = Inactive / OFF

fig.X01995

Automatic programs

Program name and display symbol	Care label	Program description
NORMAL TEMP EXTRA DRY		Normal temperature. The program will stop automatically when the garments are extra dry.
LOW TEMP EXTRA DRY		Low temperature. The program will stop automatically when the garments are extra dry.
NORMAL TEMP DRY		Normal temperature. The program will stop automatically when the garments are dry.
LOW TEMP DRY		Low temperature. The program will stop automatically when the garments are dry.
NORMAL TEMP IRON DRY		Normal temperature. The program will stop when the garments still are a bit damp.
LOW TEMP IRON DRY		Low temperature. The program will stop when the garments still are a bit damp.
LOW TEMP DOWN		Low temperature. The drying time has to be adjusted according to garment type to achieve the desired dryness. This program is suitable when drying for example duvet jacket, duvet quilt, duvet pillow.
LOW TEMP SENSITIVE		Low temperature. This program is suitable when drying for example man made fiber textiles like polyester, polyamide, natural fiber textiles (silk textiles).
WOOL		Normal temperature. The program will stop before the garments are totally dry — which protects the garments. This very gentle program is suitable when drying for example woolen garments of more or less all types. For example blankets, jackets etc.
LOW TEMP MOPS		Low temperature. The program will stop when the mops are dry. This program is suitable when drying for example synthetic microfibre mops.
LOW TEMP CLOTHS		Low temperature. The program will stop when the cloths are dry. This program is suitable when drying for example synthetic microfibre cloths.
GLOBAL DISINFECTION		Normal temperature. The program will stop when disinfection procedure criteria is fulfilled. Global Disinfection program are only available on electric- and gas heated machines. Max half load, load factor 1:44 Do not stop the drying process prematurely. Check that there are no moist areas in the load after finished drying process. Avoid entanglement of loaded items during drying process. To achieve disinfection of the laundry, in Electrolux Professional washing machines, it is necessary to use Global Disinfection programs during drying.

Program name and display symbol	Care label	Program description
NORMAL TEMP LARGE TEXTILES		Normal temperature. The program will stop automatically when the fabric is dry. This program is suitable when drying large fabrics such as bed sheets, table cloths, curtains ect. The program is built to prevent the fabric from tangling together.
LOW TEMP LARGE TEXTILES		Low temperature. The program will stop automatically when the fabric is dry. This program is suitable when drying large fabrics such as bed sheets, table cloths, curtains ect. The program is built to prevent the fabric from tangling together.

Time programs

Program name and display symbol	Care label	Program description
NORMAL TEMP DRIES SET TIME		Normal temperature. Different drying times can be selected. The program will stop when the time is up.
LOW TEMP DRIES SET TIME		Low temperature. Different drying times can be selected. The program will stop when the time is up.
AIRING DRIES SET TIME		Without heat. Different drying times can be selected. The program will stop when the time is up.

- Programs with NORMAL TEMP are suitable for most textiles.
- Programs with LOW TEMP should be used for synthetic textiles e.g. polyester, polyamide, polyacrylic and elastan, viscose, polycotton and delicate fabrics marked with the symbol (in the following figure) or with the text “Tumble dry low” or similar.

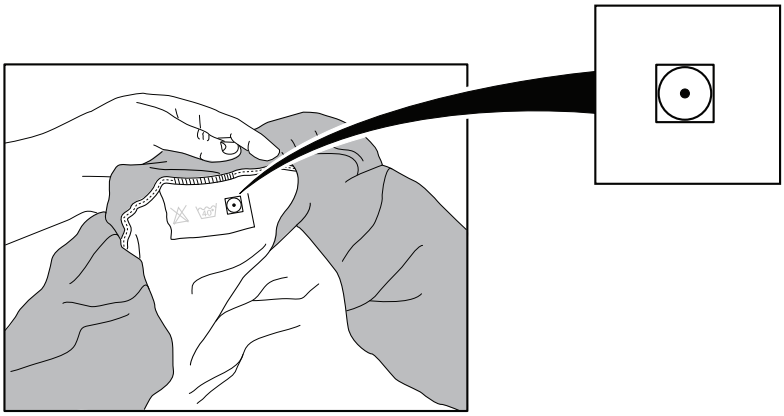

fig.X01100

5 Handling

5.1 Load

Note!

Remove all objects from pockets and make sure there are no metal objects such as screws, pins etc. left. Metal objects might cause damage to the drum.

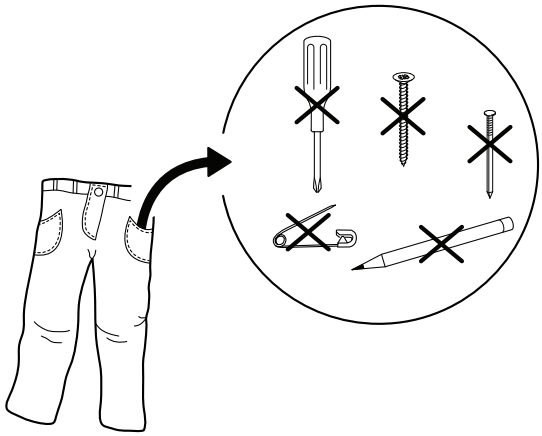

fig.X04827B

Make sure the filter is clean.

Load the goods into the machine and close the door.

Recommended maximum load	
TD6–45	45 kg
TD6–60	60 kg

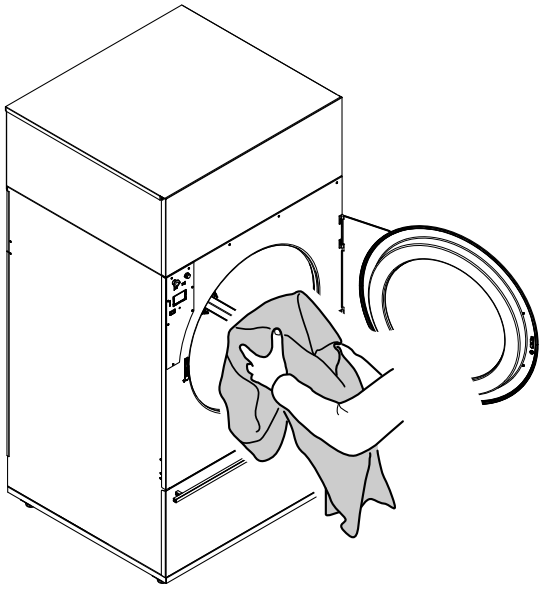

fig.X02438

5.2 How to start the machine

Automatic programs

Select program with the up- and down arrows.

Start the machine by pressing ▶II .

Time programs

Select program with the up- and down arrows.

Start the machine by pressing ▶II .

After start it is possible to change the time for the selected program:

- Increase or decrease the time with the up- and down arrows, ∧ increases the time and ∨ decreases the time.
- Press ▶II to start again.

5.3 Additional functions

There is a menu with additional functions available for selection after start. When pressing ▶II the menu will appear on the display.

Select from the menu with the up- and down arrows and press ▶II to activate.

Note!

Some of the functions may not be available or active on your machine.

Pause

It is possible to pause an ongoing program.

Select PAUSE and activate.

For some machines it is also possible to pause directly when pressing ▶II .

When pressing ▶II again the program will continue.

End a program

It is possible to end a program after start.

Select END PROGRAM and activate.

When pressing ▶II the program will be ended.

Status

Select STATUS MENU and activate.

The status menu shows the status for inlet air temp, outlet air temp, Moisture Balance (MB) and if the heat is on or off in the machine.

Change drum speed (only on machines with DSC)

Select CHANGE DRUM SPEED and activate.

Change the drum speed with the up- and down arrows and press ▶II to activate.

Use the following table as a guide to set the optimum drum speed.

Optimum drum speed	Too fast drum speed	Too slow drum speed
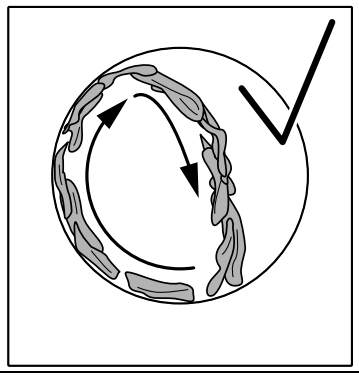	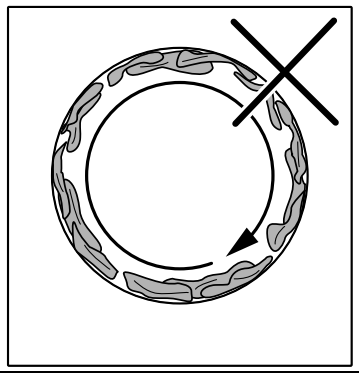	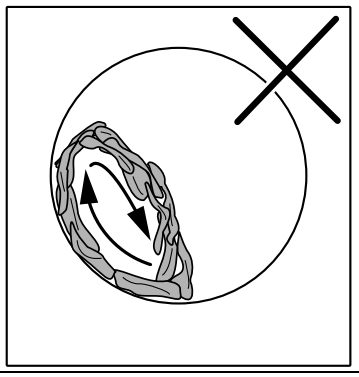

The table of optimum drum speed is a general recommendation. Optimal drum speed and how the load should be distributed in the drum can vary depending on type of load and drying process, the table should thus be seen as general load distribution recommendation.

5.4 When program has ended

Note!

For the best possible drying result it is important to empty the machine as soon as the program has ended.

If the machine is not emptied as soon as the program has ended the drum will rotate in short intervals in order to keep the goods from being wrinkled.

5.4.1 Tilting operation for easy unloading

When program has ended open the sliding door.

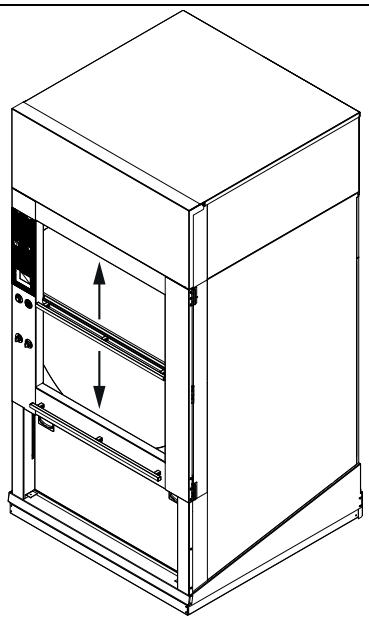

fig.X02439

Start tilting by turning the knob all the way to right position. The machine will start tilting forward and it will be easier to unload.

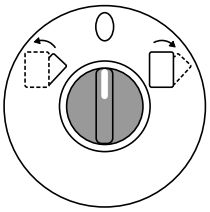	Tilt knob Use the knob to tilt the machine while loading or unloading the machine. Turn the knob to the right for tilting the machine forward and turn the knob to the left to move it back to upright position. The switch must be set in left position to be able to start a drying program. The tilting can be stopped by putting the knob in the middle position.

5.4.2 Rotating the drum when unloading

Push and turn the rotation knobs at the same time to rotate the drum when unloading.

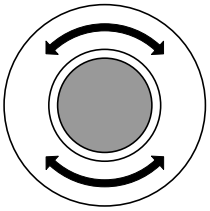	Drum rotation button Press the button at the same time as using the Drum rotation knob.	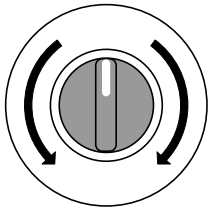	Drum rotation knob Turn the knob to the left or right to rotate the drum while emptying the machine. For safety reason the Drum rotation button must be pressed at the same time.

Note!

Rotating the drum when unloading the machine must only be made by one person.

When the machine has been unloaded, turn the tilting knob back into left position.

5.4.3 Clean the filter compartment

Check the filter compartment. Clean if necessary.

It is unnecessary to remove the lint filter for cleaning. The air system of the machine ensures that lint and dust settle automatically at the bottom of the filter compartment.

Standard machine	Machine with sliding door
When opening the filter door, first place one hand at the edge/end of the railing (near the magnet that holds the door) and pull until the door is released from the magnet. Then use both hands to open the filter door completely. It is also possible to remove the filter door completely. Detach the wire fastened to the finger protector and pull the door upwards.	Use both hands positioned according to the illustration when opening the filter door. It is also possible to remove the filter door completely. Detach the wire fastened to the finger protector and pull the door upwards.
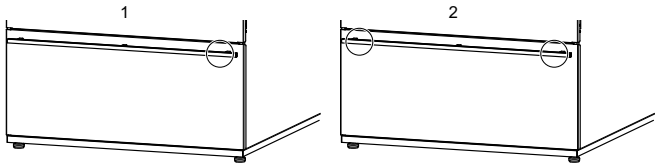	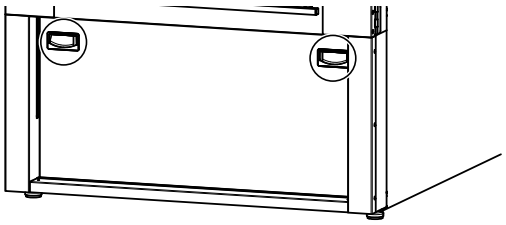

Use a long-handled brush or a vacuum cleaner to remove the lint and dust. The illustration show a standard machine as example.

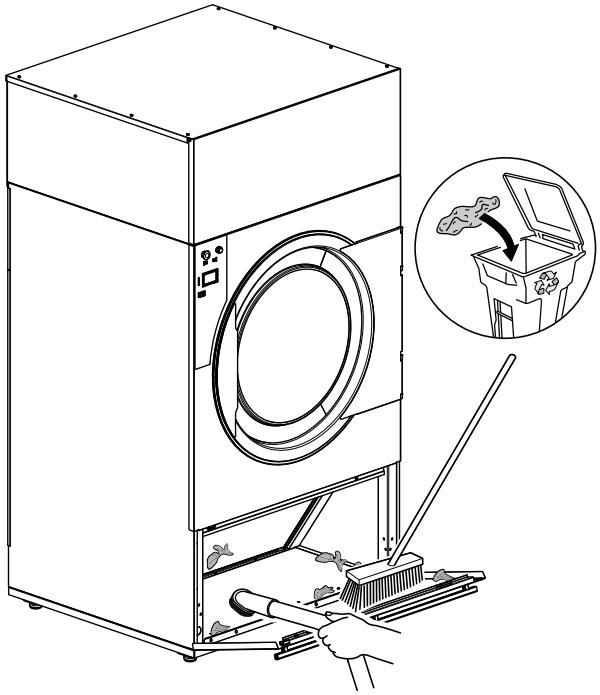

fig.X02444A

6 Error codes

A fault in the program or in the machine is indicated by an error code on the display.
Some of these error codes can be solved easily without contacting service personnel.

Error code	Text	Cause/Action
12:11	DRYING ERROR WITH MB PROGRAM	The MB system (Moisture balance) in the machine indicates that the garment is not dry enough within the maximum drying time. Check that the machine is not overloaded. Check the parameter setting for max. drying time. Check for blown fuses in mains power supply or that steam or gas supply is sufficient and valve is open.
12:18	REDISTRIBUTION OF LOAD NEEDED	Machine indicates that load is blocking the airflow. Redistribute the load. Restart the machine to clear error message.
20:1	O.H. DRUM MOTOR	Machine indicates that drum motor is overheated. Wait 30 minutes to allow the motor to cool. Press ▶II to clear error message.
30:1	O.H. FAN MOTOR	Machine indicates that the fan motor is overheated. Wait 30 minutes to allow the motor to cool. Press ▶II to clear error message.

For other error codes or repeated error codes, disconnect the power for 30 seconds. If the error code keeps coming back, contact authorized service personnel.

7 Maintenance

7.1 General

It is the responsibility of the owner of the machine/the laundry manager to make sure that maintenance is periodically performed.

Note!

Lack of maintenance may deteriorate the performance of the machine and may cause damage to components.

7.2 Time for maintenance

When the display is showing the message `TIME FOR MAINTENANCE` — contact the owner of the machine/the laundry manager to perform maintenance (if available, a telephone number and/or a tag will also be displayed).

The machine can be used meanwhile. However, the message will keep coming back until the service is performed.

The message will disappear after about 30 seconds or if ▶II is pressed.

7.3 Every day

Check that the machine does not operate with the door or the filter door open, if so, the machine must be placed out of order until repairs are made.

Clean the door, door glass, door gasket and other external parts.

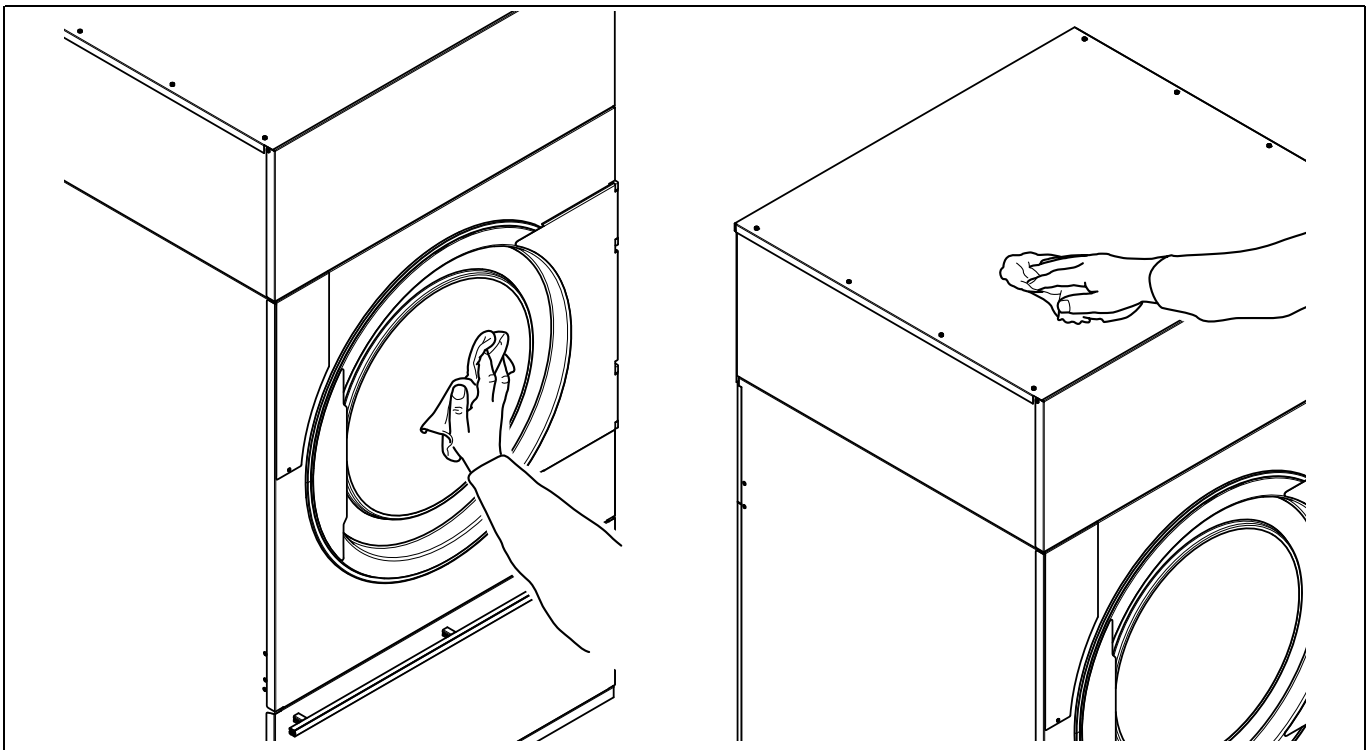

fig.X02450

Check the filter compartment. Clean if necessary.

It is unnecessary to remove the lint filter for cleaning. The air system of the machine ensures that lint and dust settle automatically at the bottom of the filter compartment.

Standard machine	Machine with sliding door
When opening the filter door, first place one hand at the edge/end of the railing (near the magnet that holds the door) and pull until the door is released from the magnet. Then use both hands to open the filter door completely. It is also possible to remove the filter door completely. Detach the wire fastened to the finger protector and pull the door upwards.	Use both hands positioned according to the illustration when opening the filter door. It is also possible to remove the filter door completely. Detach the wire fastened to the finger protector and pull the door upwards.
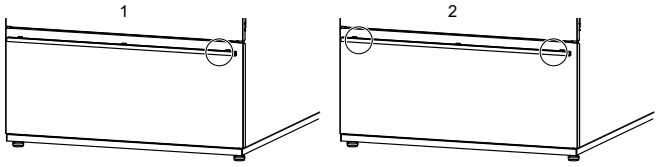	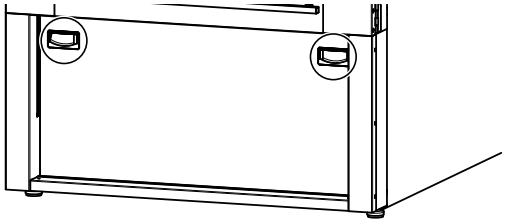

Use a long-handled brush or a vacuum cleaner to remove the lint and dust.
Check that the lint filter is unbroken. Replace if necessary.
Vacuum the filter door switch (A).
The illustration show a standard machine as example.

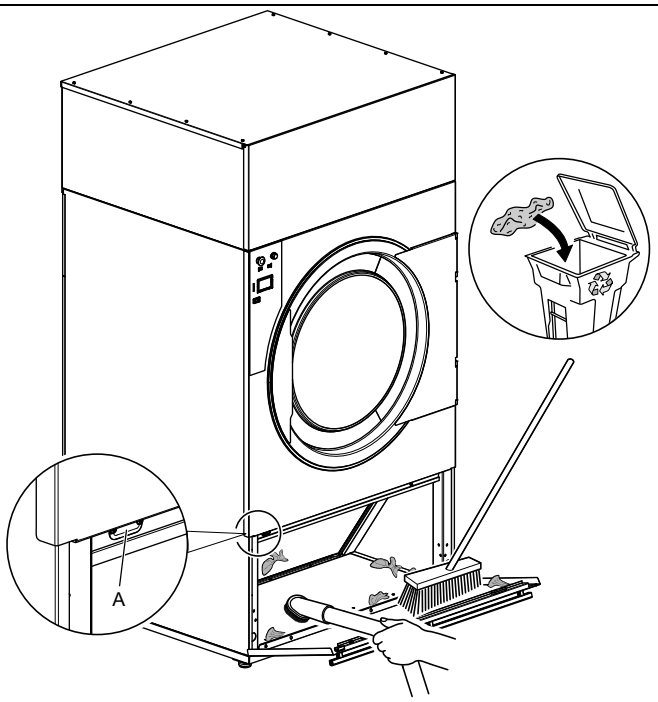

fig.X02444

Remove any lint and dust around the machine.

For machines with sliding door

Check the door packing (B) and clean if necessary (use a moist cloth).

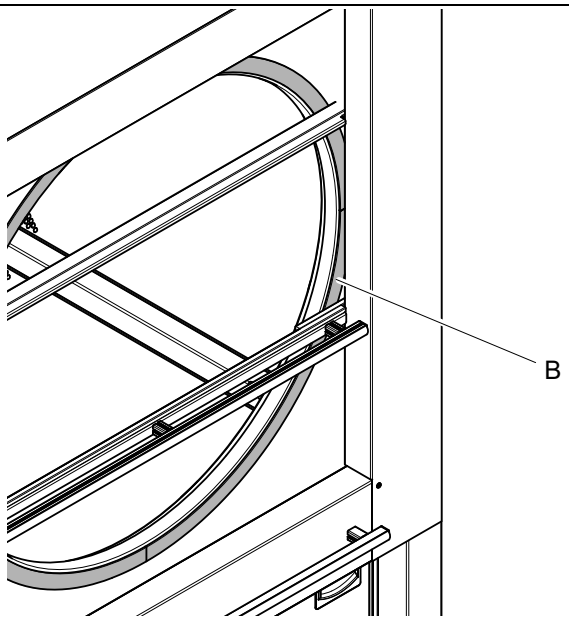

fig.X02451

✓	Correct use For all surfaces	Use mild cleaning agents, follow daily cleaning schedules, wipe with soft cloths and rinse thoroughly.
✗	Incorrect use For painted surfaces	**Do not use** polishing agents, abrasive cleaners, bleach or acid descalers.
✗	Incorrect use For stainless steel surfaces	**Do not use** chlorine bleach, muriatic acid, steel wool, wire brushes or strong clorides.

7.4 Machines with Moisture Balance (MB)

At regular basis, wipe off/clean drum and lifters with citric acid (Acidum citricum). If soap/softener residue remains, it is recommended also to use a coarse sponge.

Lack of cleaning can affect the functionality of the Moisture Balance. This can result in more moist load than requested at program end.

7.5 Maintenance to be carried out by qualified service personnel

Use qualified service personnel to perform the following maintenance:

Once a month:

- Steam heated machines: Clean the filter in front of the steam calorifier.
- Machines with sliding door: Clean the sliding door panels.

After three months, then every three to six months:

- Clean the fan, the exhaust duct and the fresh-air intake to the room.

After 1600 hours of operation or once a year, whichever comes first:

- On machines with MB: Clean the glide surface on the MB graphite collector.

  Check the RMC function through the service mode==> enter the password ==> Function test ==> Show inputs ==> RMC.

  RMC value no load = 0%

  RMC value 100 kΩ between lifter and drum = approximately 24% (Putting your hand over the lifter onto the drum will result in approximately 20% RMC value).

  RMC value system short circuit (No load) = 50%.
- Clean the door gasket
- Clean the component unit
- Clean the area around the drum
- Clean the motors, fan/fan wheel
- Check the support rollers
- Check the belt tension

For original spare parts please contact your local authorized dealer.

8 Disposal information

8.1 Appliance recyclability and disposal

8.1.1 Recyclability

Our appliances are manufactured using a significant percentage of recyclable metals (such as stainless steel, iron, aluminium, galvanized sheet, copper, etc.), which can be recovered through the local recycling systems, in compliance with the regulations in force in the country of use.

National regulations regarding waste disposal may vary. Disposal of the appliance must therefore be carried out in accordance with the applicable legislation and the directives issued by the competent authorities in the country where the appliance is decommissioned.

The components of the appliance must be separated and disposed of in accordance with their material composition (e.g. metals, oils, greases, plastics, rubber, refrigerant gases, insulating boards and other insulating material, glass wool, LEDs, etc.) and in full compliance with applicable local and international waste management regulations.

Compressors may contain oils and refrigerants fluids - are special waste and has to be recycled on local bases regulations.

8.1.2 Procedure regarding appliance disposal and component / material recovery

This product should not simply be disposed of in the environment at the end of its life cycle; it is imperative instead either to dispose of it in accordance with local environmental regulations, or, preferably, to deliver it whole to an authorized recycling center.

All removed components, including doors and other structural parts, must be delivered together with the appliance to an authorized recycling or dismantling facility.

The dismantling/recycling center will apply state of the art technologies and methods available to them to effectively disassemble the products for best recyclability.

Note that printed circuit boards, electrical motors or other components identified in European Union legislation to be of high critical raw materials recovery potential need to be addressed specifically.

In case of doubts or questions, always refer to your reference customer care service.

Before disposing of the appliance, carefully inspect its physical condition and preservation state, checking for potential leaks of liquids or gases, as well as for broken parts that may pose hazards during handling and subsequent dismantling.

	The symbol on the product indicates that this product should not be treated as domestic waste, but must be correctly disposed of in order to prevent any negative consequences for the environment and human health. For further information on the recycling of this product, contact the local dealer or agent, the customer care service or the local body responsible for waste disposal.

Note!
When dismantling the appliance, any marking, this manual and other documents concerning the appliance must be destroyed.

8.2 Disposal of packing

The packing must be disposed of in compliance with the current regulations in the country where the appliance is used. All the packing materials are environmentally friendly.

They can be safely kept, recycled or burned in an appropriate waste incineration plant. Recyclable plastic parts are marked as following examples.

PE	Polyethylene: • Outer wrapping • Instructions bag
PP	Polypropylene: • Straps
PS	Polystyrene foam: • Corner protectors

Electrolux Professional AB
341 80 Ljungby, Sweden
www.electroluxprofessional.com